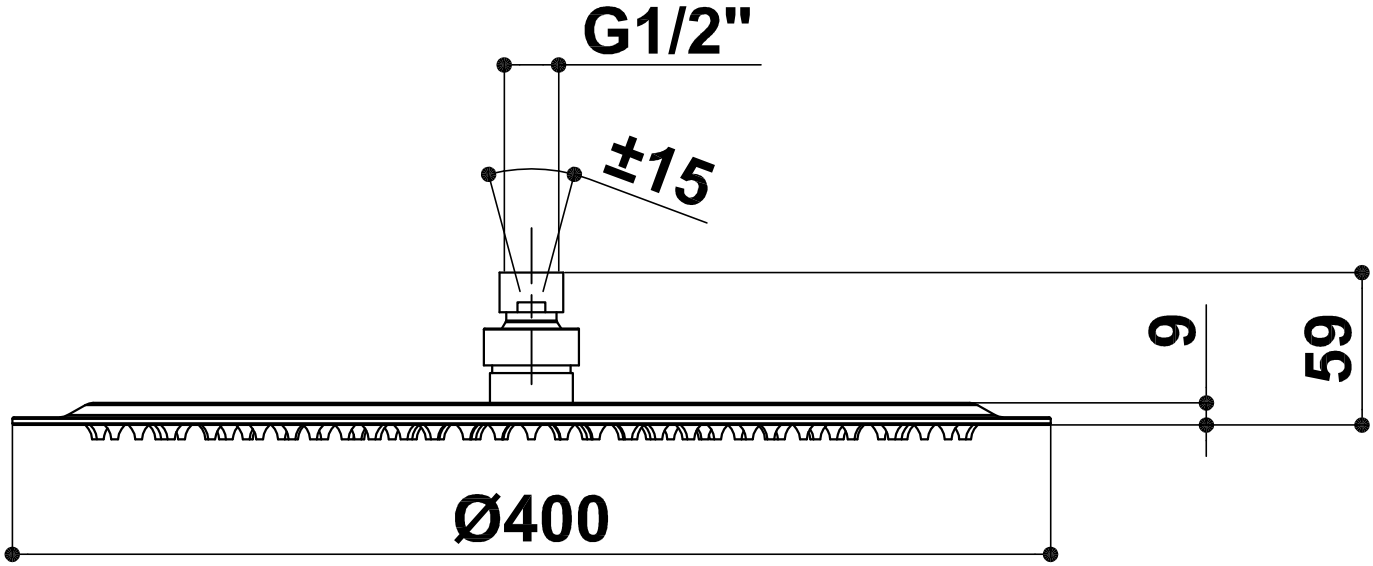
G1/2"
±15
9
59
Ø400