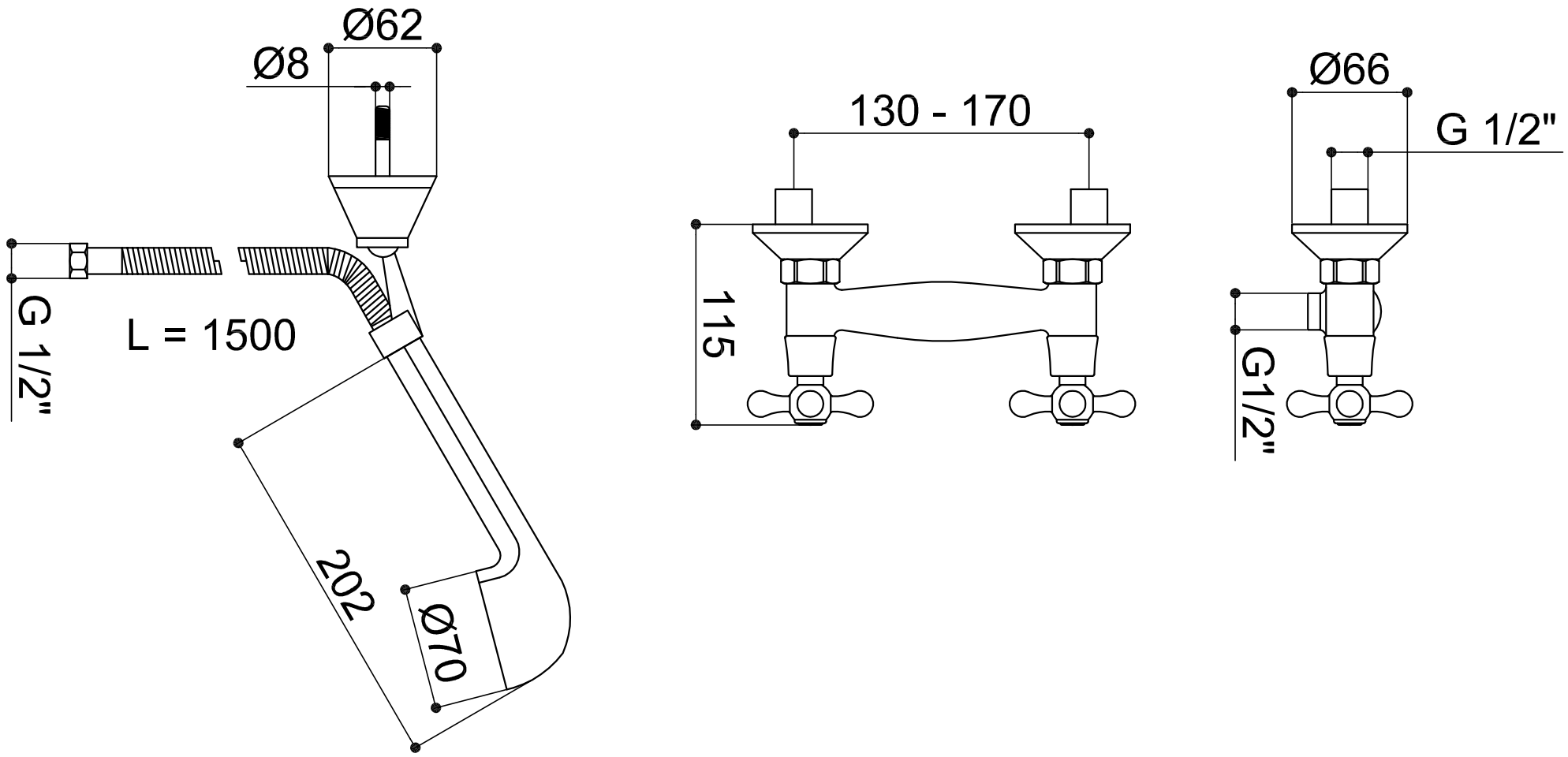
Ø62
Ø8
G 1/2"
L = 1500
202
Ø70
130 - 170
115
Ø66
G 1/2"
G1/2"