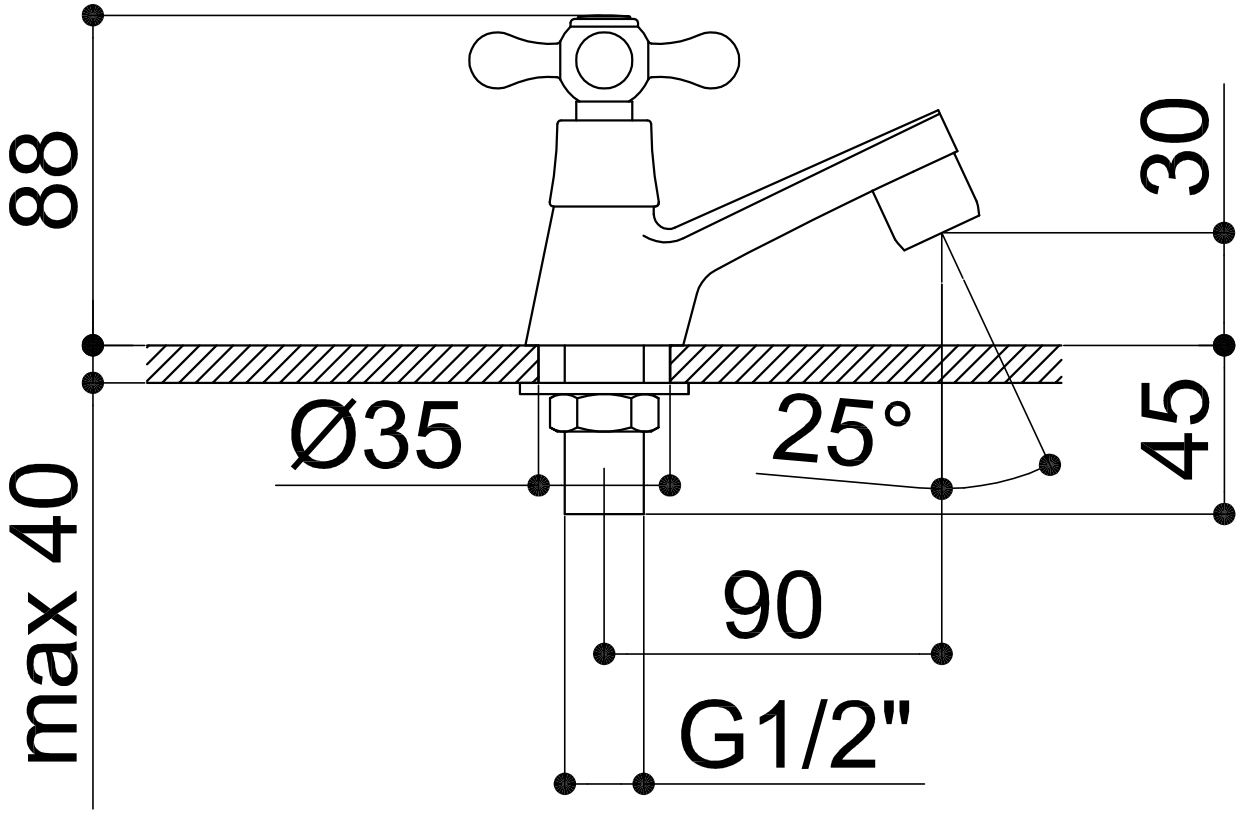
88
30
Ø35
25°
45
max 40
90
G1/2"