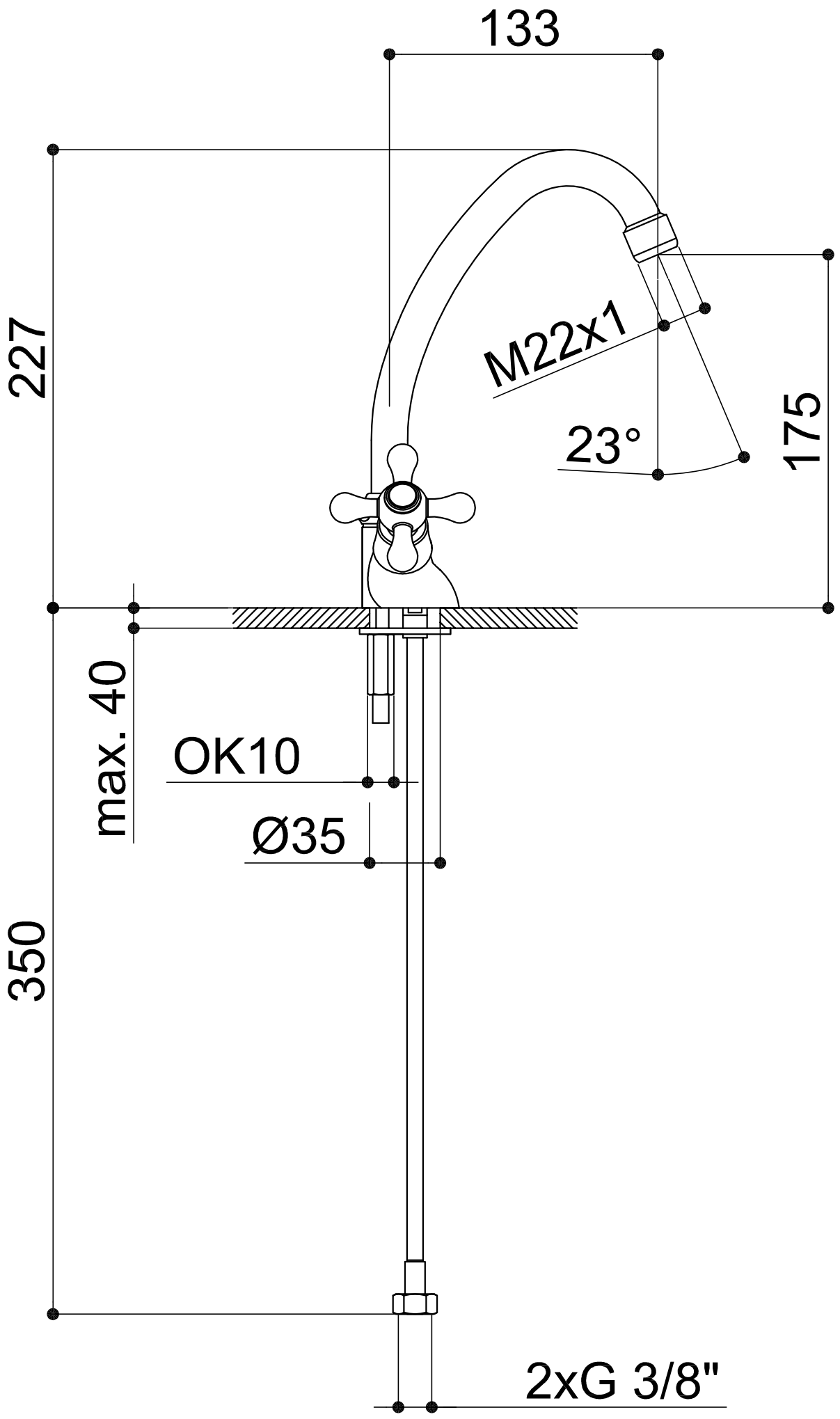
133
227
M22x1
23°
175
max. 40
OK10
Ø35
350
2xG 3/8"