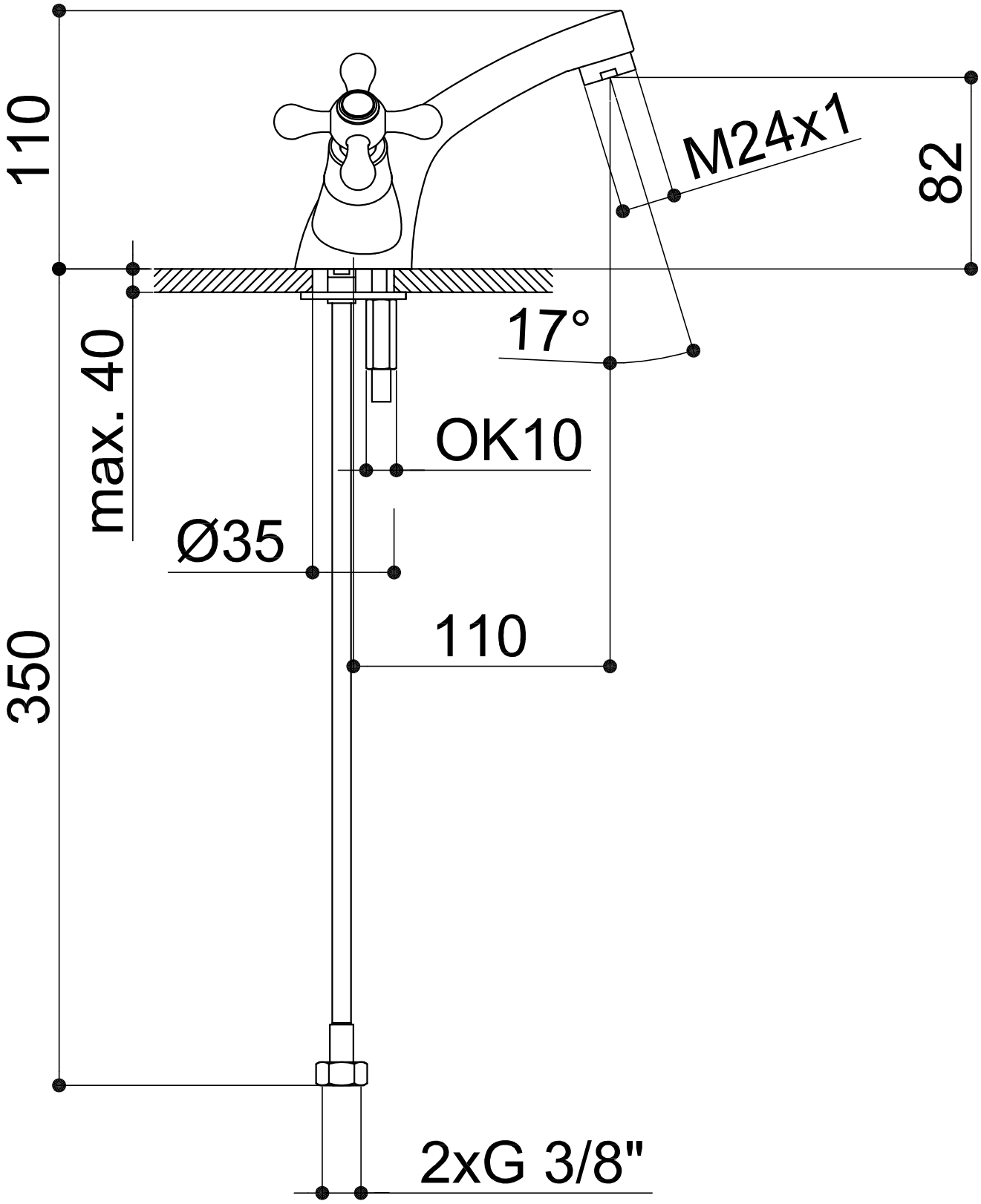
110
M24x1
82
17°
max. 40
OK10
Ø35
110
350
2xG 3/8"